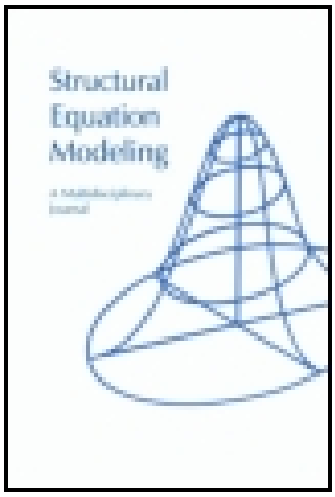

Structural Equation Modeling: A Multidisciplinary Journal
Publication details, including instructions for authors and subscription information:
http://www.tandfonline.com/loi/hsem20

Moderated Mediation Analysis Using Bayesian Methods

Lijuan (Peggy) Wang[a] & Kristopher J. Preacher[b]
[a] University of Notre Dame
[b] Vanderbilt University
Published online: 09 Sep 2014.

Structural Equation Modeling: A Multidisciplinary Journal, 00: 1–15, 2014

ISSN: 1070-5511 print / 1532-8007 online
DOI: 10.1080/10705511.2014.935256

Moderated Mediation Analysis Using Bayesian Methods

Lijuan (Peggy) Wang[1] and Kristopher J. Preacher[2]
[1] *University of Notre Dame*
[2] *Vanderbilt University*

Conventionally, moderated mediation analysis is conducted through adding relevant interaction terms into a mediation model of interest. In this study, we illustrate how to conduct moderated mediation analysis by directly modeling the relation between the indirect effect components including a and b and the moderators, to permit easier specification and interpretation of moderated mediation. With this idea, we introduce a general moderated mediation model that can be used to model many different moderated mediation scenarios including the scenarios described in Preacher, Rucker, and Hayes (2007). Then we discuss how to estimate and test the conditional indirect effects and to test whether a mediation effect is moderated using Bayesian approaches. How to implement the estimation in both BUGS and M*plus* is also discussed. Performance of Bayesian methods is evaluated and compared to that of frequentist methods including maximum likelihood (ML) with 1st-order and 2nd-order delta method standard errors and mL with bootstrap (percentile or bias-corrected confidence intervals) via a simulation study. The results show that Bayesian methods with diffuse (vague) priors implemented in both BUGS and M*plus* yielded unbiased estimates, higher power than the ML methods with delta method standard errors, and the ML method with bootstrap percentile confidence intervals, and comparable power to the ML method with bootstrap bias-corrected confidence intervals. We also illustrate the application of these methods with the real data example used in Preacher et al. (2007). Advantages and limitations of applying Bayesian methods to moderated mediation analysis are also discussed.

Keywords: Bayesian methods, moderated mediation, model specification

As described in Baron and Kenny (1986), mediation and moderation are two statistically distinct concepts. Baron and Kenny defined a *mediator* as a variable that can account for the relation between an input variable and an outcome variable, whereas they defined a *moderator* as a variable that affects the direction or strength of the relation between an input variable and an outcome variable (also see Hayes, 2013; MacKinnon, 2008). As depicted in Figure 1a, a mediation effect occurs when the input or independent variable X influences the mediator variable M, which in turn influences the outcome or response variable Y. This three-variable mediation effect model can be written as

$$\begin{aligned} M &= i_M + aX + e_M \\ Y &= i_Y + c'X + bM + e_Y, \end{aligned} \tag{1}$$

where i represents intercept and e represents error. The indirect effect of X on Y via M, the mediation effect, can be quantified as the product of the two regression coefficients a and b in Equation 1. To obtain an interval estimate of the indirect effect ab or test whether there is a statistically significant indirect effect (using the null hypothesis $H_0{:}ab = 0$), multiple inferential methods have been proposed, used, and compared. For example, MacKinnon, Lockwood, Hoffman, West, and Sheets (2002) compared multiple single-sample methods for testing the product ab. They found that the traditional Sobel test (Sobel, 1982) yielded inaccurate Type I error rates and lower power because $\hat{a}\hat{b}$ does not have a normal distribution, although both $\hat{a}$ and $\hat{b}$ from maximum

Color versions of one or more of the figures in the article can be found online at www.tandfonline.com/hsem.

Correspondence should be addressed to Lijuan (Peggy) Wang, 111 Haggar Hall, Department of Psychology, University of Notre Dame, Notre Dame, IN 46556, USA. E-mail: lwang4@nd.edu

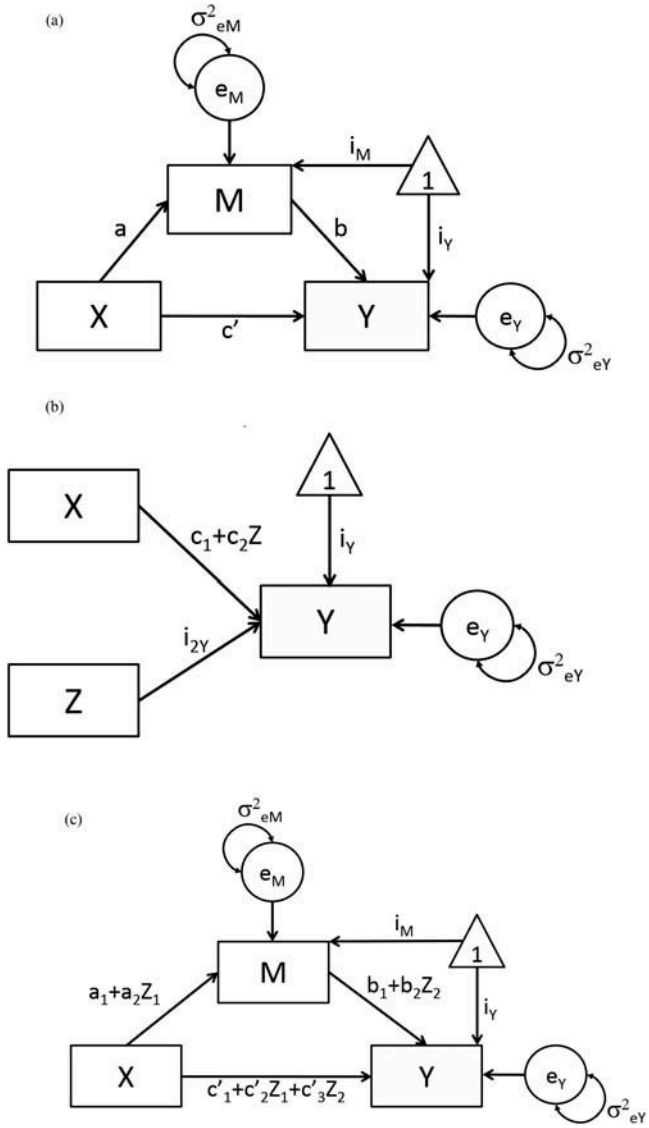

FIGURE 1 Illustrative path diagrams of mediation and moderation effects. (a) Mediation. (b) Moderation. (c) Moderated mediation (Scenario 4).

likelihood (ML) estimation asymptotically follow normal distributions, whereas two methods based on the distribution of $\hat{a}\hat{b}$ proposed by MacKinnon and colleagues generally worked better than the other evaluated methods. More recently, resampling methods such as bootstrapping for constructing confidence intervals of *ab* have become more and more popular because bootstrapping makes few assumptions about the distribution of $\hat{a}\hat{b}$, and because of its accuracy and power in testing *ab* (e.g., MacKinnon, Lockwood, & Williams, 2004; Preacher & Hayes, 2004; Shrout & Bolger, 2002). Even more recently, Bayesian methods have been applied to estimate and test the mediation effect *ab* (e.g., Biesanz, Falk, & Savalei, 2010; Wang & Zhang, 2011; Yuan & MacKinnon, 2009). There are some good features and advantages of using Bayesian methods to estimate and test *ab*. First, we specify prior distributions for *a* and *b* instead of specifying a distribution for *ab* itself, and then the empirical posterior distribution[1] of *ab* can be obtained using Markov chain Monte Carlo (MCMC) methods. Second, when diffuse or vague priors are used for the prior distributions of *a* and *b*, the influence of the forms of the prior distributions of *a* and *b* on the estimation and inference of *ab* were found to be minimal (e.g., Wang & Zhang, 2011; Yuan & MacKinnon, 2009).[2] Third, when good or accurate informative prior information is available, it is possible to include informative prior information into *a* and *b*, and thus into *ab*, to yield more accurate estimation and enhance the efficiency of the test of *ab* (smaller posterior standard deviation estimates and thus narrower interval estimates of *ab*). Fourth, the Bayesian approach supports direct probabilistic statements about the indirect effect, *ab*, because model parameters are treated as random variables in the Bayesian framework. Finally, Bayesian methods with MCMC techniques are more flexible and feasible in estimating and testing individual parameters or linear or nonlinear combinations of parameters in more complex mediation or moderation models, which is discussed and illustrated in more detail in the Bayesian estimation section.

Moderation occurs when the strength or direction of a relation between two variables *X* and *Y* varies across different groups or different individuals characterized by a moderator variable *Z*. *Z* could be a group or categorical variable or a continuous variable. Typically, a moderation effect model with a moderator *Z* can be written as

$$Y = i_{1Y} + i_{2Y}Z + c_1X + c_2XZ + e_Y. \tag{2}$$

Moderation effects are often called interaction effects in analysis of variance (ANOVA) or regression analysis because moderation effects are traditionally estimated and tested by including product terms into a model of interest as in Equation 2. In Equation 2, the interaction term is *XZ* and the moderation effect is quantified as c_2. Notice that the conditional main effects of both *Z* on *Y* and *X* on *Y* are also included in Equation 2 for the purpose of studying the interaction effect of *XZ* on *Y* over and above the additive combination of first-order effects of *Z* and *X* on *Y* (e.g., Cohen, Cohen, West, & Aiken, 2003). From Equation 2, we

[1]The posterior probability distribution is the conditional probability distribution of a random variable θ after relevant evidence is taken into account. Mathematically, we have $p(\theta|X) = \frac{p(\theta)p(X|\theta)}{p(X)}$, where $p(\theta)$ is the prior probability, X is data, $p(X|\theta)$ is the likelihood of the data, and $p(\theta|X)$ is the posterior probability.

[2]Depending on the form and precision of the vague prior, the choice of vague priors could have impacts on the posterior distributions of parameters, especially on variance components in models with random effects (e.g., Depaoli, 2013; Lambert, Sutton, Burton, Abrams, & Jones, 2005; Natarajan & McCulloch, 1998).

can see that we can treat c_2 as a regular regression parameter and thus apply any method that works for estimating and testing a regression parameter to estimate and test c_2. For example, we can apply ML estimation or Bayesian methods to construct an interval estimate of c_2.

Alternatively and equivalently, the moderation effect model in Equation 2 can be rewritten as

$$\begin{aligned} Y &= i_Y + cX + e_Y \\ i_Y &= i_{1Y} + i_{2Y}Z \\ c &= c_1 + c_2 Z. \end{aligned} \tag{3}$$

The benefits of expressing the moderation effect model using Equation 3 include that (a) we can more easily specify the moderation effect, and (b) we can more easily see the effects of the moderator Z on both the intercept i_Y and the slope c and thus can interpret these effects more straightforwardly. When there are multiple moderators or when the original model without the moderators is complicated, the benefits are magnified. The moderation effect modeled in Equation 3 is also depicted in Figure 1b. Notice that $c_1 + c_2 Z$ is the conditional effect of X on Y given Z and thus is also called the *conditional effect* or *simple slope* in the conditional process modeling framework by Hayes (2013).

MODELING MODERATED MEDIATION

Considering both mediation and moderation together, it is possible to have two types of effects, namely, moderated mediation (moderation of a mediation effect or conditional indirect effects) and mediated moderation (mediation of a moderation effect, Edwards & Lambert, 2007; Hayes, 2013; Hayes & Preacher, 2013; MacKinnon, 2008; Muller, Judd, & Yzerbyt, 2005). The differences between these two types of effects were discussed in Muller et al. (2005). More specifically, when there is overall moderation of X on Y by Z, and M accounts for the moderation, there is mediated moderation. In contrast, when there is no overall moderation of X on Y by Z and the mediating process depends on Z, then there is moderated mediation. In this study, we focus on examining moderated mediation.

Moderated mediation occurs when the mediation effect differs across different values of a moderator such that the moderator variable affects the strength or direction of the mediation effect of X on Y via M. For example, in a study of work team performance, Cole, Walter, and Bruch (2008) found that negative affective tone (a team's collective negative affect) mediated the effect of dysfunctional team behavior on team performance, but only when nonverbal negative expressivity was high.

Preacher, Rucker, and Hayes (2007) enumerated five different specific ways or scenarios to think about moderated mediation:

1. b is moderated by the input variable X.
2. a is moderated by a moderator variable Z but b is not moderated by Z.
3. b is moderated by Z but a is not moderated by Z.
4. a is moderated by a moderator variable Z_1 and b is moderated by another moderator variable Z_2.
5. a and b are both moderated by Z.

For example, a model for evaluating moderated mediation in Scenario 5 can be expressed by using interaction terms. That is,

$$\begin{aligned} M &= i_{1M} + i_{2M}Z + a_1 X + a_2 XZ + e_M \\ Y &= i_{1Y} + i_{2Y}Z + c_1' X + c_2' XZ + b_1 M + b_2 MZ + e_Y. \end{aligned} \tag{4}$$

In Equation 4, b_2 is the coefficient relating the mediator by moderator interaction to the dependent variable Y after controlling for the effects of other variables included in the model. a_2 is the coefficient relating the independent variable X by moderator interaction to the mediator variable. Therefore, to test whether the moderator Z moderates the mediation effect *ab,* we need to test whether the mediation effects vary across different values of the moderator Z. The null hypothesis of the test is $H_0: (a_1 + a_2 z_1)(b_1 + b_2 z_1) = (a_1 + a_2 z_2)(b_1 + b_2 z_2)$, where z_1 and z_2 are two values of Z. That is, $H_0: (a_1 b_2 + a_2 b_1)(z_1 - z_2) + a_2 b_2 \left(z_1^2 - z_2^2\right) = 0$. We term this test the moderated mediation test. Note that to test this hypothesis, not only b_1 and b_2 but also a_1 and a_2 are involved in computing the test statistic (see Scenario 5 of Appendix A at http://www3.nd.edu/~lwang4/mome/ for the point estimate and its sampling variance). To test the indirect effect at a specific value (here we call it the conditional indirect effect following the terms used in Preacher et al., 2007) for Z, z_0, we can conduct a test of $H_0: (a_1 + a_2 z_0)(b_1 + b_2 z_0) = 0$. Accordingly, we can also obtain a confidence interval or a credible interval to quantify moderated mediation $(a_1 b_2 + a_2 b_1)(z_1 - z_2) + a_2 b_2 \left(z_1^2 - z_2^2\right)$ or the conditional indirect effect: $a_1 b_1 + a_1 b_2 z_0 + a_2 b_1 z_0 + a_2 b_2 z_0^2$.

As we can see from the two regression equations in Equation 4, they contain multiple interaction terms, which hinder easy specification and interpretation of both moderated mediation and conditional indirect effects. Here, we propose to model different moderated mediation scenarios by using a general specification without directly including many interaction terms. Because the mediation effect is the indirect effect of X on Y via M measured by the product of a and b (see Equation 1), we include $\mathbf{Z}_1$, a column vector of moderator variables, that could moderate the relation between X and M measured by a, and $\mathbf{Z}_2$, another column vector of moderator variables, that could moderate the relation between M and Y measured by b in the model. $\mathbf{Z}_1$ and $\mathbf{Z}_2$ might or might not be the same and they can contain 0 to K variables. To formalize the idea, we propose to use the following model for specifying moderated mediation and conditional indirect effects:

$$
\begin{aligned}
M &= i_M + aX + e_M \\
Y &= i_Y + c'X + bM + e_Y \\
a &= a_1 + \boldsymbol{a}_2\boldsymbol{Z}_1 \\
i_M &= i_{1M} + \boldsymbol{i}_{2M}\boldsymbol{Z}_1 \\
b &= b_1 + \boldsymbol{b}_2\boldsymbol{Z}_2 \\
i_Y &= i_{1Y} + \boldsymbol{i}_{2Y}\boldsymbol{Z}_1 + \boldsymbol{i}_{3Y}\boldsymbol{Z}_2 \\
c' &= c'_1 + c'_2\boldsymbol{Z}_1 + c'_3\boldsymbol{Z}_2\,,
\end{aligned} \tag{5}
$$

where $\boldsymbol{a}_2, \boldsymbol{b}_2, \boldsymbol{i}_{2M}, \boldsymbol{i}_{2Y}, \boldsymbol{i}_{3Y}, \boldsymbol{c}'_2$, and $\boldsymbol{c}'_3$ are row vectors of regression coefficients. The first two rows of Equation 5 repeat the three-variable mediation model, described in Equation 1. The next five rows of Equation 5 describe the effects of moderators $\boldsymbol{Z}_1$ and $\boldsymbol{Z}_2$ on the five regression coefficients including the intercepts, a, i_M, b, i_Y, and c', in the mediation model.

In Equation 5, the regression coefficients including a and i_M in the model with the mediator as the dependent variable is influenced only by $\boldsymbol{Z}_1$ because we hypothesize that $\boldsymbol{Z}_1$ moderates only the relation between X and M. The regression coefficient b in the model with the outcome variable as the dependent variable is influenced only by $\boldsymbol{Z}_2$ because we hypothesize that $\boldsymbol{Z}_2$ moderates only the relation between M and Y. However, both i_Y and c' in the model with the outcome variable as the dependent variable are influenced by both $\boldsymbol{Z}_1$ and $\boldsymbol{Z}_2$. The rationale of including $\boldsymbol{Z}_1$ and $\boldsymbol{Z}_2$ to influence the direct effect c' after controlling for M is that we want to test the possibility that $\boldsymbol{Z}_1$ and $\boldsymbol{Z}_2$ moderate the direct effect c' because $\boldsymbol{Z}_1$ is hypothesized to moderate the relation between X and M, a, and $\boldsymbol{Z}_2$ is hypothesized to moderate the relation between M and Y, b, two components of the indirect effect. Because $\boldsymbol{Z}_1$ and $\boldsymbol{Z}_2$ potentially moderate the direct effect c' (interaction effects between X and moderators on Y), we also permit them to influence i_Y to allow the inclusion of their main effects (effects of moderators on Y). Although the model in Equation 5 resembles a multilevel mediation model, it is different from a multilevel mediation model because no random effects are included.

With this general specification, we can easily investigate the effects of moderators on each regression coefficient in a three-variable mediation model, especially the effects of moderators on the indirect effect parameters a and b. Thus, the conditional indirect effect from the moderated mediation model specified in Equation 5 can be described by $ab = (a_1 + a_2\boldsymbol{Z}_1)\,(b_1 + b_2\boldsymbol{Z}_2)$ and the moderated mediation test is of $H_0 : dif_{ab} = (a_1 + a_2\boldsymbol{Z}_{11})\,(b_1 + \boldsymbol{b}_2\boldsymbol{Z}_{21}) - (a_1 + \boldsymbol{a}_2\boldsymbol{Z}_{12})\,(b_1 + \boldsymbol{b}_2\boldsymbol{Z}_{22}) = 0$.

When both $\boldsymbol{Z}_1$ and $\boldsymbol{Z}_2$ contain *0* variables, Equation 5 reduces to the three-variable mediation model in Equation 1. When there is no mediator M in the model, Equation 5 reduces to the moderation model in Equations 2 or 3. When there are some common variables in $\boldsymbol{Z}_1$ and $\boldsymbol{Z}_2$, identical items should be collapsed together to form a single item. For example, for Scenario 5 described earlier, $Z_1 = Z_2 = Z$ and Equation 5 can be simplified to

$$
\begin{aligned}
M &= i_M + aX + e_M \\
Y &= i_Y + c'X + bM + e_Y \\
a &= a_1 + a_2Z \\
i_M &= i_{1M} + i_{2M}Z \\
b &= b_1 + b_2Z \\
i_Y &= i_{1Y} + i_{2Y}Z + i_{3Y}Z = i_{1Y} + i_{2Y}Z \\
c' &= c'_1 + c'_2Z + c'_3Z = c'_1 + c'_2Z.
\end{aligned} \tag{6}
$$

Both $\boldsymbol{Z}_1$ and $\boldsymbol{Z}_2$ contain only a single common variable Z, so we can collapse $i_{2Y}Z + i_{3Y}Z$ to form $i_{2Y}Z$ and collapse $c'_2Z + c'_3Z$ to form c'_2Z. The conditional indirect effect modeled in Equation 6 is $ab = (a_1 + a_2Z)\,(b_1 + b_2Z)$. After we rearrange the terms in Equation 6, the rearranged model is the same as the one expressed in Equation 4. However, the advantage of modeling Scenario 5 in Equation 6 over Equation 4 is that the conditional indirect effect ab and the influences of the moderator Z on a and b are more obvious in Equation 6 than in Equation 4.

The general specification in Equation 5 for modeling moderated mediation works for, but is not limited to, all five scenarios described in Preacher et al. (2007). More specifically, Table 1 displays the effects of moderators on each parameter in the three-variable mediation model under the five scenarios described in Preacher et al. (2007). The main idea of specifying a moderated mediation model by Equation 5 (Scenario 4) is also depicted in Figure 1c. An alternative way to visualize the mediation model in Equation 1, the moderation in Equation 3, and the moderated mediation model in Equation 5 (Scenario 4) is to use directed acyclic graphs (Lunn, Jackson, Thomas, Best, & Spiegelhalter, 2012), commonly used in Bayesian modeling, as shown in Figure 2. From the directed acyclic graphs, we can directly see the parameters as nodes and their dependence on other parameters.

In addition to the five scenarios, Table 1 also displays a scenario that is not described in Preacher et al. (2007). In this scenario (Scenario 6), a is moderated by moderators Z_1 and Z and b is moderated by moderators Z_2 and Z, which is a combination of Scenarios 4 and 5 in Preacher et al. (2007). From Table 1, we can clearly see the influences of Z_1, Z_2, and Z on a and b and thus the conditional indirect effect and moderated mediation can be easily calculated. The model for Scenario 6 using interaction terms expressed below, however, is more difficult to interpret and understand. In addition, the conditional indirect effect for a given set of moderator values

TABLE 1
Specify Moderated Mediation Models for the Six Scenarios Using Equation 5

		Scenarios						
		0	*1*	*2*	*3*	*4*	*5*	*6*
Dependent	*Independent*		$Z_1 = X$	$Z_1 = Z$	$Z_2 = Z$	Z_1, Z_2	$Z_1 = Z_2 = Z$	$Z_1, Z; Z_2, Z$
M	Intercept	i_M	i_M	$i_{1M} + i_{2M}Z$	i_M	$i_{1M} + i_{2M}Z_1$	$i_{1M} + i_{2M}Z$	$i_{1M} + i_{2M}Z_1 + i_{3M}Z$
	X	a	a	$a_1 + a_2Z$	a	$a_1 + a_2Z_1$	$a_1 + a_2Z$	$a_1 + a_2Z_1 + a_3Z$
Y	Intercept	i_Y	i_Y	$i_{1Y} + i_{2Y}Z$	$i_{1Y} + i_{2Y}Z$	$i_{1Y} + i_{2Y}Z_1 + i_{3Y}Z_2$	$i_{1Y} + i_{2Y}Z$	$i_{1Y} + i_{2Y}Z_1 + i_{3Y}Z_2 + i_{4Y}Z$
	M	b	$b_1 + b_2X$	b	$b_1 + b_2Z$	$b_1 + b_2Z_2$	$b_1 + b_2Z$	$b_1 + b_2Z_2 + b_3Z$
	X	c'	$c'_1 + c'_2X$	$c'_1 + c'_2Z$	$c'_1 + c'_2Z$	$c'_1 + c'_2Z_1 + c'_3Z_2$	$c'_1 + c'_2Z$	$c'_1 + c'_2Z_1 + c'_3Z_2 + c'_4Z$

Note. 0: no moderation effect on mediation; 1: b is moderated by the input variable X; 2: a is moderated by a moderator variable Z but b is not moderated by Z; 3: b is moderated by Z but a is not moderated by Z; 4: a is moderated by a moderator variable Z_1 and b is moderated by another moderator variable Z_2; 5: a and b are both moderated by Z; and 6: a is moderated by moderators Z_1 and Z and b is moderated by moderators Z_2 and Z.

and the moderated mediation test for comparing two sets of moderator values are also more difficult to extract.

$$M = i_{1M} + i_{2M}Z_1 + i_{3M}Z + a_1X + a_2Z_1X + a_3ZX + e_M$$

$$Y = i_{1Y} + i_{2Y}Z_1 + i_{3Y}Z_2 + i_{4Y}Z + c'_1X + c'_2Z_1X + c'_3Z_2X + c'_4ZX + b_1M + b_2Z_2M + b_3ZM + e_Y.$$

Therefore, the advantages of specifying moderated mediation models using Equation 5 include (a) it is a more general specification, and thus it might help researchers to specify different moderated mediation models under specific scenarios using a general/unified model; (b) it is easy to interpret the conditional indirect effect $ab = (a_1 + \boldsymbol{a}_2\boldsymbol{Z}_1)(b_1 + \boldsymbol{b}_2\boldsymbol{Z}_2)$ and moderated mediation $(a_1 + \boldsymbol{a}_2\boldsymbol{Z}_{11})(b_1 + \boldsymbol{b}_2\boldsymbol{Z}_{21}) - (a_1 + \boldsymbol{a}_2\boldsymbol{Z}_{12})(b_1 + \boldsymbol{b}_2\boldsymbol{Z}_{22})$; (c) it is easy to include multiple moderators for a and b because both $\boldsymbol{Z}_1$ and $\boldsymbol{Z}_2$ can contain multiple variables (e.g., Scenario 6); and (d) it is easy and straightforward to obtain posterior distributions of parameters and thus the point estimates (e.g., mean, median, or mode of a posterior distribution) in this form using Bayesian estimation (especially when it is implemented in BUGS) discussed in the next section.

ESTIMATING AND TESTING CONDITIONAL INDIRECT EFFECTS AND MODERATED MEDIATION BY BAYESIAN METHODS

Preacher et al. (2007) discussed how to estimate and test conditional indirect effects in the first five scenarios in Table 1 using multiple methods including the Sobel test (the first-order delta method), the second-order delta method, and bootstrapping. For example, they provided the point estimate and first- and second-order variance estimates of the conditional indirect effect at a given set of moderator values. In addition, estimates and confidence intervals of conditional indirect effects from different methods including bootstrapping can be readily obtained from the free program PROCESS (Hayes, 2013), a macro for mediation, moderation, and conditional process modeling available for use with SAS and SPSS. However, Preacher et al. (2007) did not conduct statistical inference on moderation of the mediation or indirect effect by comparing the conditional indirect effects at two different sets of moderator values. Hayes (2014) described a simple test for moderated mediation for models that correspond to our Scenarios 1 to 3 and provided examples using bootstrap confidence intervals implemented in M*plus* and PROCESS. To systematically show how to test moderated mediation in different scenarios, Appendix A at http://www3.nd.edu/~lwang4/mome/ contains the point estimate and variance estimates (both first- and second-order approximations) for moderated mediation, useful for testing whether the indirect effect depends linearly on the moderators, in each scenario included in Table 1 using normal-theory standard errors and asymptotic tests.

For testing a regression coefficient or a mediation effect (Scenario 0), variable values are not a part of the test statistic because the variables values included in the point estimate and in the standard error of the point estimate completely cancel. For testing moderated mediation in Scenarios 1 to 3, we can also see that the moderator values included in the point estimate and standard error of the point estimate completely cancel and thus the test statistics do not contain moderator values. In Scenarios 4 to 6, however, from Appendix A we can see that the test statistics are functions of model parameter estimates, variance estimates of model parameter estimates, and conditional values of the moderators, which implies that the test results might vary across different values of the moderators in these scenarios.

With regard to the relative performance of the alternative inference methods, simulation results from Preacher et al. (2007) demonstrated that "the bootstrapping method showed higher power and closer-to-accurate (although still poor) Type I error rates than delta method results" for making inferences about the conditional indirect effects (p. 205). However, neither the conditional indirect effect nor moderated mediation have been estimated and tested by Bayesian methods and the performance of Bayesian methods relative

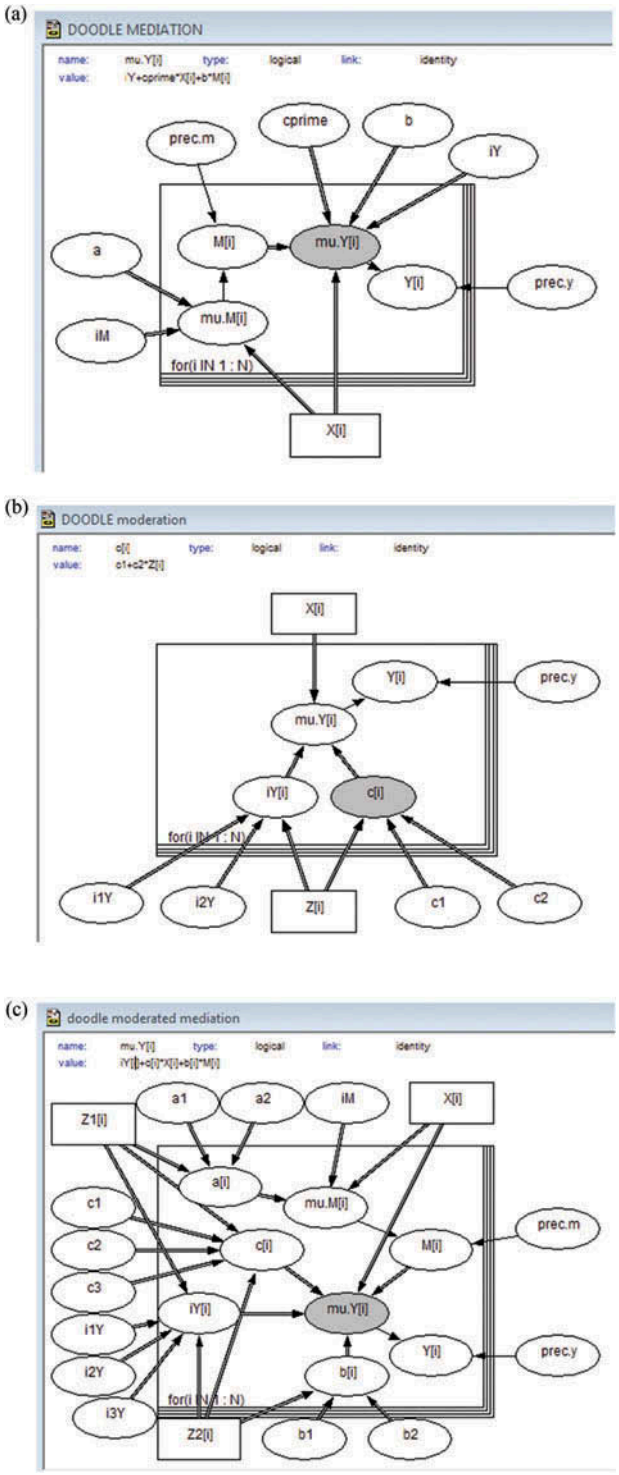

FIGURE 2 Directed acyclic graphs of mediation and moderation effects. The graphs were drawn using the Doodle feature of WinBUGS. The accuracy of the graphs has been checked by checking the BUGS code automatically generated from the graphs. (a) Mediation. (b) Moderation. (c) Moderated mediation (Scenario 4).

to other methods in estimating and testing moderated mediation has not been studied in previous research. As stated in Muthén (2010), it is especially interesting to "study the relative performance of Bayes versus ML with bootstrap" (p. 12). Therefore, in this study, we propose to use an alternative approach to these conventional methods, Bayesian methods, to estimate and test both the conditional indirect effect and moderated mediation specified in Equation 5. In addition, we will compare the relative performance of different methods at estimating and testing the effects.

In the Bayesian estimation framework, parameters are treated as random variables and data are treated as fixed observations. The goal is to obtain the posterior probability density distribution of the parameters, $p(\boldsymbol{\theta}|data)$, by combining the likelihood function (data information) and prior information (e.g., Carlin & Louis, 2000; Congdon, 2001). In this study, $\boldsymbol{\theta} = \left(a_1, \boldsymbol{a}_2, i_{1M}, \boldsymbol{i}_{2M}, b_1, \boldsymbol{b}_2, i_{1Y}, \boldsymbol{i}_{2Y}, i_{3Y}, c_1', \boldsymbol{c}_2', \boldsymbol{c}_3', \sigma_{eM}^2, \sigma_{eY}^2\right)'$ contains all model parameters in Equation 5 and *data* represents the observed information on X, M, Y, $\boldsymbol{Z}_1$, and $\boldsymbol{Z}_2$. Based on Bayes's theorem, the posterior distribution of the parameters is proportional to the product of the likelihood function and the prior information on the parameters such that $p(\boldsymbol{\theta}|data) \propto p(data|\boldsymbol{\theta})\, p(\boldsymbol{\theta})$. A point estimate of $\boldsymbol{\theta}$, a mean estimator, can be constructed by $\int \boldsymbol{\theta} p(\boldsymbol{\theta}|data) d\boldsymbol{\theta}$. Because the integration is difficult to solve explicitly, MCMC methods are often used to obtain the posterior distributions (Gilks, Richardson, & Spiegelhalter, 1996).

Therefore, to apply Bayesian approaches, we first need to specify a model for the likelihood function, $p(data|\boldsymbol{\theta})$, and specify the prior distributions for the model parameters $\boldsymbol{\theta}$, $p(\boldsymbol{\theta})$. In this study, we use the model specification in Equation 5, independent normal priors for the regression coefficients $\boldsymbol{\beta} = \left(a_1, \boldsymbol{a}_2, i_{1M}, \boldsymbol{i}_{2M}, b_1, \boldsymbol{b}_2, i_{1Y}, \boldsymbol{i}_{2Y}, \boldsymbol{i}_{3Y}, c_1', \boldsymbol{c}_2', \boldsymbol{c}_3'\right)'$ and independent inverse gamma priors for the variance parameters $\boldsymbol{\sigma}^2 = \left(\sigma_{eM}^2, \sigma_{eY}^2\right)'$. These priors are semiconjugate priors (Gelman, Carlin, Stem, & Rubin, 2004)[3] and the ones most frequently used in Bayesian regression analysis. More specifically, the prior distributions can be specified as follows:

$$\beta_p \sim N(0, 1.0 + 6E)$$

$$\sigma_l^2 \sim IGamma(0.001, 0.001),$$

where β_p represents the pth element of $\boldsymbol{\beta}$ and σ_l^2 represents the lth element of $\boldsymbol{\sigma}^2$. All of the preceding prior distributions are diffuse (vague) priors (Congdon, 2001). However, it has been shown that good or accurate informative priors can make the regression parameter estimates more accurate and efficient (e.g., Ibrahim & Chen, 2000; Yuan & MacKinnon, 2009; Zhang, Hamagami, Wang, Grimm, & Nesselroade,

[3]The full conditional distribution of a parameter is in the same distribution family of the specified prior distribution of the parameter. The full conditional distribution, $p(\boldsymbol{\theta}_m|\boldsymbol{\theta}_{-m}, data)$, is the distribution of the mth component of the parameter vector conditioning on all the remaining components and the data.

2007). To have more comparable and meaningful comparison of the performance between Bayesian and non-Bayesian methods, diffuse priors were mainly considered in this study. However, valid informative priors can also be considered to improve efficiency in testing moderated mediation.

After specifying the model and the priors, MCMC techniques can be used to obtain the posterior distributions of the model parameters. One popular MCMC method is Gibbs sampling (Gilks et al., 1996). Gibbs sampling works by iteratively drawing samples from the full conditional distributions of all the parameters. The Gibbs sampling algorithm works as follows:

1. Assign initial values to each model parameter. In this study, the initial values of the regression coefficients are set to be 0 for the parameters with nonzero true values and 1 for those with zero true values and the initial values of the residual variances are set to be 0.1, which are all different from the true values.
2. Sample the model parameters from the full conditional distributions. For example, sample $\boldsymbol{a}_2$ from $p\left(\boldsymbol{a}_2 \,|a_1,\ i_{1M}, i_{2M}, \sigma^2_{eM}, data\right)$ and sample $\boldsymbol{b}_2$ from $p\left(\boldsymbol{b}_2 \,|b_1,\ i_{1Y}, \boldsymbol{i}_{2Y}, c'_1, \boldsymbol{c}'_2, \boldsymbol{c}'_3, \sigma^2_{eY}, data\right)$. Notice that $\boldsymbol{a}_2$ is in the regression model with the mediator as the dependent variable and $\boldsymbol{b}_2$ is in the regression model with the outcome variable as the dependent variable. Therefore, the full conditional distribution for $\boldsymbol{a}_2$ does not need to be conditional on the model parameters in the model with the outcome variable as the dependent variable. The same rule also holds for $\boldsymbol{b}_2$.
3. Calculate $ab = (a_1 + \boldsymbol{a}_2\boldsymbol{Z}_1)\,(a_1 + \boldsymbol{b}_2\boldsymbol{Z}_2)$ with a single set of moderator values of interest for evaluating the conditional indirect effect .
4. Calculate $dif_{ab} = (a_1 + \boldsymbol{a}_2\boldsymbol{Z}_{11})\,(b_1 + \boldsymbol{b}_2\boldsymbol{Z}_{21}) - (a_1 + \boldsymbol{a}_2\boldsymbol{Z}_{12})\,(b_1 + \boldsymbol{b}_2\boldsymbol{Z}_{22})$ with two sets of moderator values ($\boldsymbol{Z}_{11}$ and $\boldsymbol{Z}_{21}$ vs. $\boldsymbol{Z}_{12}$ and $\boldsymbol{Z}_{22}$) of interest to test whether the mediation effect is moderated by the moderators for evaluating moderated mediation.
5. Repeat Steps 2, 3, and 4 until convergence and desired precision of the parameter estimates are met.

Not all samples from Gibbs sampling are used in statistical inference. A number of samples at the beginning of the iterations (also called the burn-in period) are discarded because it takes some number of iterations to reach convergence and a stationary posterior distribution. The length of the burn-in period is influenced by the complexity of the model and the data, with more complex models and data demanding a longer burn-in period. Then the resulting samples from the full conditional distributions and the post-burn-in iterations can be viewed from the joint distribution of the model parameters (Geman & Geman, 1984). To check the convergence of the Gibbs sampling, we use both a graphical method to check the overall pattern of the trace plot of Markov chains and the Geweke statistic (Geweke, 1992) obtained from the R package CODA (Plummer, Best, Cowles, & Vines, 2005) or the Gelman–Rubin potential scale reduction (PSR) statistic from M*plus* (Muthén & Muthén, 1998–2011). If the trace plot appears stationary and the Geweke statistic is between –1.96 and 1.96 or the PSR statistic is less than 1.05, convergence is considered achieved.[4]

Among the five steps, Step 3 is included to evaluate the mediation effect with a single set of moderator values, the conditional indirect effect, whereas Step 4 is included to evaluate the difference in the mediation effects from two different sets of moderator values of interest and thus evaluate whether the mediation effect is moderated. In these two steps, ab and dif_{ab} are treated as random variables (or random variable vectors) and their distributions can be empirically obtained by post-burn-in samples from MCMC methods. With the converged samples from the conditional posterior distributions, we can directly obtain the empirical distributions of the model parameters, ab, and dif_{ab} and then conduct statistical inference for moderated mediation based on the empirical distributions. For example, a point estimate of a parameter can be obtained using the mean, the median, or the mode of the converged samples and the posterior standard deviation can be obtained using the standard deviation of the converged samples. The 95% credible interval can be obtained based on the empirical 2.5% and 97.5% percentiles or by the highest posterior density intervals. Because the distributions of ab or dif_{ab} might not be symmetric, the credible intervals constructed in this way might not be symmetric.

The flexibility of estimating and testing ab and dif_{ab} through their posterior distributions makes Bayesian methods desirable for moderated mediation analysis. For example, when some conventional methods such as the first-order and the second-order delta methods are used for obtaining the standard errors of ab and dif_{ab}, we need to derive these standard errors manually, which could vary from one model to another or from one scenario to another, as shown in Appendix A. When the moderated mediation model is complex, for example, with multiple moderators, the derivations can be quite cumbersome, as shown in Scenario 6 of Appendix A. However, for Bayesian methods, the estimation and test of moderated mediation is unified across different scenarios by the five steps described earlier in this paper.

[4]The Bayesian approach described in this paper is different from the two distribution approaches used by MacKinnon et al. (2004), also called the Monte Carlo method (Preacher & Selig, 2012). For the two distribution approaches, we first input estimates of a and b (e.g., from ML) and their standard errors as fixed values to simulate the empirical distribution for ab, in which a and b follow normal distributions in the simulations by assumption. The Bayesian strategy uses one or more MCMC approaches (e.g., Gibbs sampling) to draw samples for parameters a and b from their full conditional distributions, and thus we can obtain the empirical posterior distribution of a, b, and ab without inputting ML or other estimates of a and b first. From the posterior distributions, we can obtain point estimates for a, b, and ab and their standard deviations. In the Bayesian framework, a and b can follow any distributions.

The Bayesian estimation procedure was conducted in both the free program BUGS[5] (Lunn et al., 2000; Lunn, Thomas, Best, & Spiegelhalter, 2012;) and the commercially popular SEM program M*plus* (Muthén & Muthén, 1998–2011). The MCMC methods in both BUGS and M*plus* are based on Gibbs sampling. For Bayesian estimation, we included BUGS because BUGS is a general Bayesian software program and M*plus* because moderated mediation analysis is conventionally conducted in SEM packages such as M*plus* with ML. Note that the model specification in Equation 5 can be directly translated into BUGS language. For M*plus* programming, the model specification in Equation 5 needs to be transformed to the specification form with interactions. Sample code for Scenario 6 is contained in Appendix B at http://www3.nd.edu/~lwang4/mome/.

SIMULATION

A simulation study is conducted to examine the empirical biases, mean square errors (MSE), coverage probabilities, Type I error rates, and power of Bayesian methods in estimating and testing both the conditional indirect effects and moderated mediation under different conditions. In addition, the relative performance of Bayesian methods on estimating and testing the effects is compared to that of some conventional methods including ML with first-order standard errors, ML with second-order standard errors, ML with bootstrap percentile CIs, and ML with bootstrap bias-corrected (BC) CIs. For implementing the non-Bayesian methods, M*plus* is used. For implementing Bayesian methods, both BUGS and M*plus* are used and thus the Bayesian results from these two programs will be compared. Furthermore, for both BUGS and M*plus*, results from multiple point estimators can be obtained. For example, BUGS produces both mean and median point estimates whereas M*plus* produces mean, median, and mode point estimates. Therefore, results from these three estimators will also be briefly compared.

For simulating the data, only Scenarios 4 and 6 are considered in the simulation because the other scenarios (1, 2, 3, and 5) can be viewed as special cases or simpler cases of these two scenarios. To simplify the study and mimic the simulation conditions of Preacher et al. (2007), in each model, we set all the a and b regression coefficients equal. For instance, for Scenario 6, $a_1 = a_2 = a_3 = b_1 = b_2 = b_3$. In addition, we set all i_* and c'_* to be 0. All residual variables, moderators, and X are normally distributed with zero means and unit variances. Four different combinations of effect sizes ($a_* = b_* = 0$, .14, .39, and .59) and five different sample sizes ($n = 50$, 100, 200, 500, and 1,000) are considered. The number of replications per cell is 1,000. In each replication, the numbers of burn-in and post-burn-in iterations are set to be 10,000, which was purposefully designed to be large (relative to the complexity of the fitted model) to minimize nonconvergence rates. Two chains are used in each data analysis. The simulations with BUGS were conducted via a SAS macro (Zhang, McArdle, Wang, & Hamagami, 2008) and the simulations with M*plus* were conducted via R. The convergence rates of the simulations from both BUGS and M*plus* were comparable and close to 100%.

The parameters of interest in this simulation include ab and dif_{ab}, where $ab = (a_1 + \boldsymbol{a}_2\boldsymbol{Z}_1)(b_1 + \boldsymbol{b}_2\boldsymbol{Z}_2)$ is for the conditional indirect effect with a single set of moderator values (here we use $\boldsymbol{Z}_1 = \boldsymbol{Z}_2 = 1$) and dif_{ab} reflects moderated mediation by testing whether the mediation effect is moderated by the moderators with two sets of moderator values (here we use 1s vs. 0s).

Let $\gamma = ab$ or dif_{ab} denote the true conditional indirect effect value or the true moderated mediation value and $\hat{\gamma}_i = \hat{a}_i\hat{b}_i$ or $\hat{dif}_{ab,i}$, $i = 1, \ldots, 1{,}000$ denote the estimate from the ith replication. To evaluate the performance of the studied methods, the relative bias is calculated by $\text{Rbias} = 100 \times \left[\frac{\sum_{i=1}^{1{,}000}\hat{\gamma}_i}{1{,}000\gamma} - 1\right]$ when $\gamma \neq 0$ and the bias is calculated by $\text{Bias} = \frac{\sum_{i=1}^{1{,}000}\hat{\gamma}_i}{1{,}000} - \gamma$ when $\gamma = 0$. MSE is calculated by $\text{MSE} = \frac{\sum_{i=1}^{1{,}000}(\hat{\gamma}_i - \gamma)^2}{1{,}000}$. Let $\hat{l}_i$ and $\hat{u}_i$ denote the lower and upper limits of an obtained 95% CI of γ in the ith replication of the simulation. The coverage probability is calculated by $\text{Coverage} = \frac{\#\left(\hat{l}_i < \gamma < \hat{u}_i\right)}{1{,}000}$ where $\#\left(\hat{l}_i < \gamma < \hat{u}_i\right)$ is the total number of replications in which the CIs include the true value. Good 95% CIs from different replications should give the correct coverage probability of 0.95. Finally, rejection rates (Type I error rate or power) can be calculated by $\text{Rejectionrate} = \frac{\#\left(\hat{l}_i > 0\right) or \#\left(\hat{u}_i < 0\right)}{1{,}000}$ where $\#\left(\hat{l}_i > 0\right)$ or $\#\left(\hat{u}_i < 0\right)$ is the total number of replications in which 0 is outside an interval.

Simulation Results

Empirical bias and MSE. Results on empirical biases and MSEs for estimating ab and dif_{ab} are displayed in Tables 2 and 3. From the tables, we can see that the Bayesian procedures implemented in both M*plus* and BUGS using the mean estimator produced virtually unbiased estimates of both ab and dif_{ab} in that the estimates were very close to their true values. Comparing empirical biases between the two Bayesian procedures, the M*plus* Bayes procedure (maximum relative bias = 2.59%) generally had slightly lower bias than the BUGS procedure (maximum relative bias = 5.29%) but the differences were trivial. In addition, biases from the two Bayesian procedures, especially the M*plus* Bayes procedure, were comparable to the biases from the ML procedure, which

[5]There are two versions of BUGS, WinBUGS and OpenBUGS, which share common coding except for a few exceptions (e.g., Dirichlet priors). In this study, code can be run in both WinBUGS and OpenBUGs. WinBUGS is no longer supported, whereas OpenBUGS is being supported for development.

TABLE 2
Empirical Bias and Mean Square Error (MSE) of Estimating a Conditional Indirect Effect

		ML					*Mplus Bayes*					*BUGS*				
Scenario	*Effect Size*	*n50*	*n100*	*n200*	*n500*	*n1000*	*n50*	*n100*	*n200*	*n500*	*n1000*	*n50*	*n100*	*n200*	*n500*	*n1000*
Bias or Relative Bias																
4	0	.000	.001	−.000	−.000	.000	.001	.001	−.000	−.000	.000	.071	.069	−.008	−.025	−.000
	.14	.768	−1.163	−1.697	−.446	−.291	.936	−1.089	−1.751	−.483	−.328	3.764	−1.674	−2.508	−.652	−.615
	.39	.007	−.595	−.585	−.140	−.123	−.008	−.588	−.609	−.166	−.134	1.226	−.769	−.877	−.178	−.241
	.59	−.085	−.407	−.413	−.119	−.094	−.104	−.398	−.426	−.129	−.097	.847	−.509	−.599	−.124	−.170
6	0	.002	.000	−.001	.000	.000	.001	.000	−.001	.000	.000	.002	.001	−.001	.000	.000
	.14	−.001	−.004	−.004	.009	.005	−.956	−.835	−.804	.747	.391	−2.190	−1.376	−1.291	.570	.023
	.39	−.004	−.003	−.001	.002	.002	−.695	−.424	−.228	.123	.131	−1.057	−.762	−.482	.049	−.039
	.59	−.002	−.001	−.000	.001	.001	−.427	−.246	−.137	.041	.087	−.639	−.493	−.332	−.017	−.041
MSE																
4	0	.003	.007	.000	.000	.000	.003	.001	.000	.000	.000	.003	.001	.000	.000	.000
	.14	.012	.004	.002	.001	.000	.012	.004	.002	.001	.000	.012	.004	.002	.001	.000
	.39	.067	.028	.013	.005	.002	.067	.028	.013	.005	.002	.068	.028	.013	.005	.002
	.59	.144	.060	.028	.011	.005	.144	.060	.028	.011	.005	.146	.060	.028	.011	.005
6	0	.008	.001	.000	.000	.000	.008	.001	.000	.000	.000	.008	.001	.000	.000	.000
	.14	.040	.014	.005	.002	.001	.040	.014	.005	.002	.001	.039	.014	.005	.002	.001
	.39	.234	.096	.039	.016	.008	.233	.096	.039	.016	.008	.232	.095	.038	.016	.008
	.59	.487	.202	.082	.033	.017	.487	.202	.082	.016	.017	.485	.202	.082	.033	.017

Note. For the zero effect size conditions, empirical biases are displayed, whereas empirical relative biases are displayed for the nonzero effect size conditions. ML = Maximum likelihood.

TABLE 3
Empirical Bias and Mean Square Error (MSE) of Estimating Moderated Mediation

		ML					*Mplus Bayes*					*BUGS*				
Scenario	*Effect Size*	*n50*	*n100*	*n200*	*n500*	*n1000*	*n50*	*n100*	*n200*	*n500*	*n1000*	*n50*	*n100*	*n200*	*n500*	*n1000*
Bias or Relative Bias																
4	0	0.001	0.001	0.000	0.000	0.000	0.001	0.001	0.000	0.000	0.000	0.039	0.080	−0.017	−0.014	0.001
	.14	2.746	−0.626	−1.138	0.005	−0.171	2.585	−0.568	−1.158	−0.037	−0.209	5.292	−0.954	−1.926	−0.101	−0.477
	.39	0.513	−0.475	−0.357	0.002	−0.107	−2.396	2.799	2.266	0.057	0.704	1.630	−0.643	−0.648	−0.027	−0.227
	.59	0.190	−0.335	−0.270	−0.035	−0.088	−0.410	1.207	1.041	0.155	0.336	1.019	−0.443	−0.459	−0.043	−0.167
6	0	0.001	0.000	−0.001	0.000	0.000	0.001	0.000	−0.001	0.000	0.000	0.001	0.001	−0.001	0.000	0.000
	.14	0.000	−0.002	−0.005	0.008	0.004	−0.819	−0.674	−0.827	0.674	0.264	−2.219	−1.404	−1.409	0.549	−0.086
	.39	−0.004	−0.002	−0.001	0.001	0.001	−0.647	−0.403	−0.235	0.095	0.097	−1.026	−0.790	−0.514	0.039	−0.066
	.59	−0.002	−0.001	−0.001	0.001	0.001	−0.390	−0.238	−0.140	0.016	0.064	−0.604	−0.510	−0.345	−0.026	−0.054
MSE																
4	0	0.002	0.000	0.000	0.000	0.000	0.002	0.000	0.000	0.000	0.000	0.002	0.001	0.000	0.000	0.000
	.14	0.008	0.003	0.001	0.000	0.000	0.008	0.003	0.001	0.000	0.000	0.008	0.003	0.001	0.000	0.000
	.39	0.043	0.018	0.008	0.003	0.001	0.043	0.018	0.008	0.003	0.001	0.043	0.018	0.008	0.003	0.002
	.59	0.090	0.038	0.017	0.006	0.003	0.090	0.038	0.017	0.006	0.003	0.092	0.038	0.017	0.006	0.003
6	0	0.007	0.001	0.000	0.000	0.000	0.007	0.001	0.000	0.000	0.000	0.007	0.001	0.000	0.000	0.000
	.14	0.034	0.012	0.005	0.002	0.001	0.034	0.012	0.004	0.002	0.001	0.034	0.012	0.005	0.002	0.001
	.39	0.194	0.078	0.031	0.012	0.006	0.194	0.078	0.031	0.012	0.006	0.193	0.077	0.031	0.012	0.006
	.59	0.399	0.162	0.066	0.026	0.013	0.399	0.161	0.066	0.026	0.013	0.397	0.161	0.066	0.026	0.013

Note. For the zero effect size conditions, empirical biases are displayed, whereas empirical relative biases are displayed for the nonzero effect size conditions. ML = Maximum likelihood.

is consistent with our expectations because diffuse priors were used. Therefore, all three estimation procedures, ML, M*plus* mean, and BUGS mean, produced accurate estimates of both *ab* and dif_{ab}.

Note that for Bayesian estimation, other estimators are available. As mentioned earlier, both the median and mode are available in M*plus* and the median is also available in BUGS as estimators. These alternative estimators, however, could produce estimates with higher bias for moderated mediation analysis. For instance, for the $a = b = .14$ condition with $n = 50$ in Scenario 4, the median estimator from BUGS had a relative bias of 14.52% whereas the median estimator from M*plus* had a relative bias of 13.05%. In terms of the mode estimator in M*plus*, the relative bias was as

high as 21.23% for that condition. Increasing the numbers of burn-in and post-burn-in iterations did not improve the accuracy of those estimates. The default estimator in M*plus* is the median. Therefore, researchers might need to overwrite the default to obtain more accurate parameter estimates for moderated mediation analysis.

In terms of MSE, all three estimation procedures, ML, M*plus* with the mean estimator, and BUGS with the mean estimator, produced almost identical MSEs, which shows that the precision of the estimates was close to each other comparing the three estimation procedures.

Coverage probability and rejection rate. Results on coverage probabilities and rejection rates (empirical Type I error rates or power) are displayed in Tables 4 and 5. For the zero effect size condition, all six methods including ML with first-order SE, ML with second-order SE, ML with percentile bootstrap, ML with BC bootstrap, M*plus* Bayesian, and BUGS Bayesian, had 95% coverage probabilities close to 1, which is equivalent to having Type I error rates close to 0. This indicates that all methods are somewhat conservative. This result is consistent with the findings from Bayesian methods with noninformative priors in Yuan and MacKinnon (2009) and the findings in Preacher et al. (2007) from frequentist resampling methods. For the nonzero effect size conditions, the ML methods with first-order or second-order SEs generally had coverage probabilities that deviated further from the nominal value 95% than the other methods. The other four methods, including two bootstrap methods and two Bayesian implementations, had comparable and close to 95% coverage probabilities.

With regard to empirical power, power from the two Bayesian implementations was higher than that from the first-order and second-order delta methods with ML and also higher than that from ML with percentile bootstrap. Between the two Bayesian implementations, power from BUGS Bayesian is comparable to power from M*plus* Bayesian. Furthermore, power from Bayesian methods is slightly higher than that from ML with BC bootstrap for testing *ab* and dif_{ab} with medium or large effect sizes. When effect sizes are small, power from Bayesian methods is slightly lower than that from ML with BC bootstrap in some conditions. Note that for the Bayesian methods, multiple Bayesian credible intervals can be constructed. For example, equal tail credible intervals (2.5%, 97.5%) and the highest posterior density (HPD; the minimum density of any point within the HPD interval is equal to or larger than the density of any point outside that interval) intervals can be used for statistical inference. In this study, the equal tail credible intervals were used and results on them were reported because we found that they yielded higher power than the HPD intervals.

Generally speaking, the comparison results were consistent between the two scenarios and between the evaluations of *ab* and dif_{ab}.

REAL DATA ANALYSIS EXAMPLE

To illustrate how to specify a moderated mediation model using Equation 5 and how to draw statistical inferences about a conditional indirect effect and moderated mediation using Bayesian methods, we reanalyzed the same real data presented in Preacher et al. (2007). The data were collected as a part of the Michigan Study of Adolescent Life Transitions (Eccles, 1998) and contain four variables: student intrinsic interest in math at sixth grade (INTRINT6), math performance at the end of eighth grade (MATH8), teacher perception of talent at seventh grade (PERCTAL7), and math self-concept at eighth grade (SCMATH8). We adopted the model fitted in Preacher et al. (2007), a moderated mediation model in Scenario 3, to analyze the data. More specifically, in the model, INTRINT influences PERCTAL 7, which in turn influences MATH8 where SCMATH8 was hypothesized to moderate the effect of PERCTAL7 on MATH. Therefore, the specified model has the following form:[6]

$$\begin{aligned}
&PERCTAL7 = i_M + aINTRINT + e_M \\
&SCMATH8 = i_Y + c'INTRINT + bPERCTAL7 + e_Y \\
&a = a_1 \\
&i_M = i_{1M} \\
&b = b_1 + b_2 SCMATH8 \\
&i_Y = i_{1Y} + i_{2Y} SCMATH8 \\
&c' = c'_1
\end{aligned} \tag{7}$$

Parameter estimates and posterior standard deviations with Bayesian estimation obtained from BUGS or M*plus* are compared with ML results (also in Preacher et al., 2007) in Table 6. From Table 6, we can see that both the estimates and the standard errors or posterior standard deviations from three methods were comparable because noninformative priors were used for the Bayesian methods.

Ninety-five percent CIs of three *ab*s and one dif_{ab} from the six compared methods are reported in Table 7. From Table 7, we can see that all of the CIs did not include 0, indicating that the conditional indirect effects were significant and the moderated mediation evaluated with SCMATH at 1 versus 0 was also significant. As guided by Preacher et al. (2007), researchers can also make a plot to show the relations of the conditional indirect effects or the moderated mediation to the moderator values using Bayesian credible intervals.

[6]We did not include SCMATH8 for the c' equation to be consistent with the model specification in Preacher et al. (2007).

TABLE 4
Coverage Probability and Rejection Rate of Inferring a Conditional Indirect Effect

		ML With First-Order SE					*ML With Second-Order SE*					*ML With Percentile Bootstrap*					*ML With BC Bootstrap*					*Mplus Bayes*					*BUGS*				
Scenario	*Effect Size*	*n50*	*n100*	*n200*	*n500*	*n1000*	*n50*	*n100*	*n200*	*n500*	*n1000*	*n50*	*n100*	*n200*	*n500*	*n1000*	*n50*	*n100*	*n200*	*n500*	*n1000*	*n50*	*n100*	*n200*	*n500*	*n1000*	*n50*	*n100*	*n200*	*n500*	*n1000*
Coverage Probability																															
4	0	1.000	0.999	0.999	1.000	1.000	1.000	0.999	0.999	1.000	0.999	0.998	0.999	0.999	0.999	0.999	0.994	0.993	0.996	0.994	0.996	1.000	0.997	0.995	0.999	0.998	1.000	0.997	0.995	1.000	0.998
	.14	0.906	0.904	0.917	0.940	0.939	0.980	0.934	0.928	0.943	0.941	0.975	0.946	0.941	0.954	0.939	0.929	0.945	0.959	0.960	0.946	0.983	0.951	0.951	0.956	0.949	0.982	0.950	0.948	0.952	0.946
	.39	0.915	0.940	0.942	0.950	0.952	0.924	0.942	0.943	0.950	0.952	0.950	0.950	0.953	0.955	0.943	0.963	0.954	0.955	0.955	0.944	0.953	0.952	0.953	0.955	0.956	0.951	0.952	0.956	0.953	0.956
	.59	0.920	0.938	0.945	0.949	0.953	0.923	0.938	0.945	0.949	0.953	0.951	0.952	0.953	0.957	0.946	0.955	0.955	0.951	0.955	0.946	0.948	0.953	0.959	0.955	0.954	0.948	0.951	0.957	0.955	0.955
6	0	1.000	0.999	1.000	1.000	1.000	1.000	0.999	1.000	1.000	1.000	0.995	0.996	0.998	0.996	1.000	0.993	0.994	0.992	0.993	0.997	1.000	0.997	0.998	0.999	1.000	1.000	0.998	1.000	0.999	1.000
	.14	0.874	0.900	0.930	0.940	0.945	0.936	0.918	0.936	0.941	0.947	0.974	0.941	0.954	0.949	0.949	0.946	0.953	0.961	0.954	0.950	0.963	0.939	0.956	0.947	0.947	0.967	0.940	0.956	0.950	0.952
	.39	0.908	0.930	0.948	0.944	0.941	0.901	0.930	0.949	0.944	0.941	0.962	0.947	0.961	0.953	0.943	0.975	0.949	0.963	0.949	0.944	0.955	0.945	0.953	0.948	0.943	0.956	0.946	0.956	0.950	0.942
	.59	0.921	0.934	0.950	0.947	0.945	0.926	0.934	0.950	0.946	0.945	0.967	0.949	0.964	0.953	0.941	0.975	0.950	0.965	0.947	0.944	0.957	0.945	0.955	0.948	0.947	0.958	0.948	0.955	0.949	0.945
Rejection Rate																															
4	0	0.000	0.001	0.001	0.000	0.000	0.000	0.001	0.001	0.000	0.001	0.002	0.001	0.001	0.001	0.001	0.006	0.007	0.004	0.006	0.004	0.000	0.003	0.005	0.001	0.002	0.000	0.003	0.005	0.000	0.002
	.14	0.025	0.097	0.392	0.962	1.000	0.021	0.082	0.358	0.952	1.000	0.032	0.164	0.517	0.977	1.000	0.065	0.275	0.629	0.987	1.000	0.043	0.178	0.539	0.978	1.000	0.051	0.171	0.544	0.979	1.000
	.39	0.786	0.997	1.000	1.000	1.000	0.776	0.997	1.000	1.000	1.000	0.746	0.991	1.000	1.000	1.000	0.817	0.996	1.000	1.000	1.000	0.807	0.997	1.000	1.000	1.000	0.821	0.997	1.000	1.000	1.000
	.59	0.989	1.000	1.000	1.000	1.000	0.988	1.000	1.000	1.000	1.000	0.978	1.000	1.000	1.000	1.000	0.985	1.000	1.000	1.000	1.000	0.988	1.000	1.000	1.000	1.000	0.988	1.000	1.000	1.000	1.000
6	0	0.000	0.001	0.000	0.000	0.000	0.000	0.001	0.000	0.000	0.000	0.005	0.004	0.002	0.004	0.000	0.007	0.006	0.008	0.007	0.003	0.000	0.003	0.002	0.001	0.000	0.000	0.002	0.000	0.001	0.000
	.14	0.062	0.232	0.706	0.999	1.000	0.054	0.200	0.671	0.998	1.000	0.043	0.309	0.782	0.996	1.000	0.090	0.419	0.848	0.998	1.000	0.087	0.338	0.804	0.999	1.000	0.082	0.330	0.796	0.999	1.000
	.39	0.931	0.998	1.000	1.000	1.000	0.927	0.998	1.000	1.000	1.000	0.843	1.000	1.000	1.000	1.000	0.893	1.000	1.000	1.000	1.000	0.931	0.998	1.000	1.000	1.000	0.926	0.998	1.000	1.000	1.000
	.59	1.000	1.000	1.000	1.000	1.000	1.000	1.000	1.000	1.000	1.000	0.997	1.000	1.000	1.000	1.000	0.997	1.000	1.000	1.000	1.000	1.000	1.000	1.000	1.000	1.000	1.000	1.000	1.000	1.000	1.000

Note. ML = Maximum likelihood; SE = Standard error; BC = bias corrected.

TABLE 5
Coverage Probability and Rejection Rate of Inferring Whether a Mediation Effect is Moderated

		ML with First-order SE					*ML with Second-order SE*					*ML With Percentile Bootstrap*					*ML With BC Bootstrap*					*Mplus Bayes*					*BUGS*				
Scenario	*Effect Size*	*n50*	*n100*	*n200*	*n500*	*n1000*	*n50*	*n100*	*n200*	*n500*	*n1000*	*n50*	*n100*	*n200*	*n500*	*n1000*	*n50*	*n100*	*n200*	*n500*	*n1000*	*n50*	*n100*	*n200*	*n500*	*n1000*	*n50*	*n100*	*n200*	*n500*	*n1000*
Coverage Probability																															
4	0	0.999	0.999	0.999	1.000	1.000	0.999	0.999	0.999	1.000	0.999	0.999	0.998	1.000	0.999	1.000	0.996	0.997	0.998	0.992	0.997	0.997	0.996	0.999	1.000	0.999	0.997	0.996	0.999	1.000	1.000
	.14	0.941	0.909	0.924	0.938	0.944	0.994	0.945	0.937	0.944	0.947	0.985	0.956	0.952	0.947	0.952	0.966	0.946	0.963	0.955	0.952	0.988	0.952	0.952	0.953	0.960	0.987	0.952	0.954	0.954	0.961
	.39	0.919	0.932	0.942	0.944	0.952	0.927	0.934	0.943	0.944	0.952	0.956	0.958	0.949	0.947	0.945	0.972	0.960	0.952	0.948	0.943	0.957	0.952	0.951	0.950	0.957	0.957	0.954	0.950	0.950	0.957
	.59	0.928	0.935	0.943	0.940	0.951	0.930	0.935	0.943	0.940	0.951	0.953	0.956	0.952	0.952	0.941	0.967	0.957	0.948	0.951	0.945	0.951	0.959	0.953	0.944	0.953	0.953	0.951	0.953	0.945	0.957
6	0	1.000	0.999	1.000	1.000	1.000	1.000	0.999	1.000	1.000	1.000	0.997	0.998	0.996	0.998	1.000	0.995	0.995	0.993	0.993	0.999	1.000	0.997	1.000	1.000	0.999	1.000	0.997	1.000	1.000	1.000
	.14	0.886	0.909	0.933	0.939	0.946	0.955	0.816	0.936	0.941	0.948	0.980	0.945	0.952	0.951	0.940	0.959	0.951	0.962	0.955	0.944	0.975	0.938	0.955	0.945	0.948	0.976	0.939	0.955	0.950	0.953
	.39	0.909	0.930	0.940	0.948	0.942	0.901	0.933	0.942	0.948	0.942	0.960	0.947	0.954	0.950	0.941	0.975	0.955	0.961	0.945	0.943	0.951	0.941	0.950	0.946	0.942	0.953	0.946	0.953	0.952	0.942
	.59	0.920	0.933	0.942	0.946	0.944	0.923	0.933	0.942	0.945	0.944	0.968	0.950	0.958	0.947	0.943	0.978	0.948	0.962	0.947	0.938	0.957	0.940	0.956	0.948	0.945	0.956	0.943	0.960	0.950	0.944
Rejection rate																															
4	0	0.001	0.001	0.001	0.000	0.000	0.001	0.001	0.001	0.000	0.001	0.001	0.002	0.000	0.001	0.000	0.004	0.003	0.002	0.008	0.003	0.003	0.004	0.001	0.000	0.001	0.003	0.004	0.001	0.000	0.000
	.14	0.021	0.088	0.323	0.928	1.000	0.016	0.074	0.298	0.914	1.000	0.020	0.124	0.413	0.942	1.000	0.040	0.198	0.513	0.960	1.000	0.029	0.147	0.444	0.950	1.000	0.029	0.143	0.435	0.952	1.000
	.39	0.786	0.982	1.000	1.000	1.000	0.699	0.980	1.000	1.000	1.000	0.608	0.981	1.000	1.000	1.000	0.688	0.988	1.000	1.000	1.000	0.727	0.989	1.000	1.000	1.000	0.736	0.989	1.000	1.000	1.000
	.59	0.981	1.000	1.000	1.000	1.000	0.980	1.000	1.000	1.000	1.000	0.950	1.000	1.000	1.000	1.000	0.970	1.000	1.000	1.000	1.000	0.978	1.000	1.000	1.000	1.000	0.980	1.000	1.000	1.000	1.000
6	0	0.000	0.001	0.000	0.000	0.000	0.000	0.001	0.000	0.000	0.000	0.003	0.002	0.004	0.002	0.000	0.005	0.005	0.007	0.007	0.001	0.000	0.003	0.000	0.000	0.001	0.000	0.003	0.000	0.000	0.000
	.14	0.059	0.215	0.674	0.997	1.000	0.054	0.184	0.641	0.996	1.000	0.032	0.276	0.733	0.996	1.000	0.065	0.366	0.811	0.998	1.000	0.070	0.312	0.773	0.997	1.000	0.068	0.303	0.755	0.997	1.000
	.39	0.912	0.998	1.000	1.000	1.000	0.905	0.998	1.000	1.000	1.000	0.809	1.000	1.000	1.000	1.000	0.855	1.000	1.000	1.000	1.000	0.913	0.998	1.000	1.000	1.000	0.914	0.998	1.000	1.000	1.000
	.59	0.999	1.000	1.000	1.000	1.000	0.998	1.000	1.000	1.000	1.000	0.992	1.000	1.000	1.000	1.000	0.994	1.000	1.000	1.000	1.000	0.998	1.000	1.000	1.000	1.000	0.998	1.000	1.000	1.000	1.000

Note. ML = Maximum likelihood; SE = Standard error; BC = bias corrected.

TABLE 6
Real Data Analysis Results: Parameter Estimates and Their Standard Errors or Posterior Standard Deviations

	ML (Mplus)		*Bayesian (Mplus)*		*Bayesian (BUGS)*	
Parameters	*Estimate*	*SE*	*Estimate*	*SD*	*Estimate*	*SD*
i_{1M}	3.597	.154	3.597	.155	3.600	.154
$a = a_1$	.211	.030	.210	.030	.210	.030
i_{1Y}	3.020	1.327	3.022	1.325	2.954	1.207
i_{2Y}	.550	.276	.549	.276	.566	.257
c'_1	.021	.066	.022	.067	.020	.067
c'_2	.131	.313	.130	.312	.147	.285
b_2	.142	.060	.142	.060	.139	.055

Note. The Bayesian estimates and the posterior standard deviations are means and standard deviations of the post-burn-in samples from the posterior distributions. ML = Maximum likelihood.

DISCUSSION

In this article, we proposed a general moderated mediation model by directly modeling the relation between the mediation component effects including *a* and *b* and the moderators, to permit easier specification and interpretation of both conditional indirect effects and moderated mediation. The proposed model can be used to model many different moderated mediation scenarios including the scenarios described in Preacher et al. (2007). We then discussed how to estimate and test the conditional indirect effects and to test whether a mediation effect is moderated using Bayesian approaches. Performance of Bayesian methods was evaluated and compared to that of frequentist methods including ML with first-order or second-order delta method standard errors and ML with bootstrap (percentile or BC CIs) via a simulation study. The results from our studied conditions showed that Bayesian methods with diffuse priors implemented in both BUGS and M*plus* yielded unbiased estimates, higher power than the ML methods with parametric standard errors and the ML method with bootstrap percentile CIs, and comparable power to the ML method with bootstrap BC CIs. Previous research has shown that valid informative priors can make regression parameter estimates even more accurate and precise (e.g., Ibrahim & Chen, 2000; Yuan & MacKinnon, 2009; Zhang et al., 2007). Therefore, we can infer from our results that Bayesian methods with valid informative priors might yield higher power than the studied bootstrap methods for moderated mediation analysis or even mediation analysis in general. Taken in conjunction with the results of Yuan and MacKinnon (2009), our results show further promising uses for Bayesian methods in moderation and mediation analysis.

Conducting statistical inference for a conditional indirect effect has been emphasized in Preacher et al. (2007). In this study, we also studied how to test whether a mediation effect is moderated. As the conditional indirect effect varies with different moderator values, moderated mediation depends on the selection of the moderator values. Appendix A showed the hypotheses and derivations of point estimates and standard errors for testing moderated mediation using the delta method for various scenarios. The appendix might be limited in its use because of the complex forms of the derived standard errors. This limitation, however, shows the advantage and flexibility of using Bayesian methods with MCMC: there are no complicated derivations and it offers unified, simple procedures for different scenarios.

Our results showed that the two implementation platforms for Bayesian estimation, M*plus* and BUGS, worked equivalently well in terms of their performance. However, there are a few subtle differences in using these two platforms for moderated mediation analysis from our experience. First, our proposed general specification form of moderated mediation analysis can be directly translated into the BUGS language, whereas the conventional interaction form needs to be used when M*plus* is used. Having said that, when using M*plus*, we still encourage readers to use the general specification form to specify a moderated mediation model and then convert it to the interaction form because the former permits easier interpretation of the parameters and easier parameterization of the effects (the conditional indirect effect and moderated mediation). Second, with the same number of iterations, M*plus* is faster than BUGS. Third, the default estimator is the median in M*plus* whereas both the mean and median are the

TABLE 7
Real Data Analysis Results: 95% Confidence/Credible Intervals

	ML First-order SE	*ML Second-order SE*	*Bootstrap Percentile*	*Bootstrap BC*	*Mplus Bayesian*	*BUGS Bayesian*
SCMATH=			*Conditional Indirect Effect*			
3.6044	[.073, .197]	[.072, .199]	[.076, .205]	[.077, .206]	[.077, .203]	[.081, .200]
4.9245	[.114, .235]	[.112, .239]	[.119, .235]	[.120, .237]	[.117, .239]	[.118, .238]
6.2446	[.138, .290]	[.151,.278]	[.141, .294]	[.145, .299]	[.142, .295]	[.141, .294]
SCMATH=			*Test Whether a Mediation Effect is Moderated*			
1 vs. 0	[.004, .056]	[.004, .056]	[.001, .062]	[.003, .065]	[.005, .058]	[.006, .055]

Note. The conditional indirect effect is estimated and tested with $\hat{a}_1(\hat{b}_1 + \hat{b}_2 SCMATH)$ at SCMATH = Mean ± 1 *SD*. To test whether a mediation effect is moderated, we test whether $\hat{a}_1(\hat{b}_1 + \hat{b}_2 SCMATH_1) - \hat{a}_1(\hat{b}_1 + \hat{b}_2 SCMATH_2) = 0$ with $SCMATH_1 = 1$ and $SCMATH_2 = 0$. ML = Maximum likelihood; SE = Standard error; BC = bias corrected.

default estimators in BUGS. Our simulation results indicated that the mean estimator yielded more accurate results than the median estimator and thus special attention needs to be paid to the use of the estimators. More generally, for SEM, BUGS is a general Bayesian programming software program that allows very flexible specifications of likelihood functions (e.g., Wang & McArdle, 2008; Wang, Zhang, McArdle, & Salthouse, 2008) or alternative prior distributions, whereas M*plus* is a powerful latent variable modeling software program that includes many handy defaults in specifying complex SEM models. Both platforms have a lot to recommend them.

Researchers have found that different Bayesian estimators (e.g., posterior mean, posterior median, posterior mode) combined with different priors could have different empirical performance when inferring a parameter with a skewed distribution (e.g., Bayes & Branco, 2007; Browne & Draper, 2006). Our simulation results echoed this finding, and future research should be conducted to further understand the performance of the estimators with other priors in mediation and moderation analysis. The proposed moderated mediation model is a special case of general linear models and thus assumptions underlying linear models also apply here. For example, the proposed model in this study cannot deal with clustered or multilevel data because one of the model assumptions is that observations are independent. Mediation analysis using multilevel modeling has been discussed in previous literature (e.g., MacKinnon, 2008; Preacher, 2011; Preacher, Zhang, & Zyphur, 2011; Preacher, Zyphur, & Zhang, 2010). Investigating how to apply Bayesian methods to study moderated mediation for multilevel data would be an interesting direction for future research. Furthermore, when missing data exist, Bayesian methods can be used for data augmentation to deal with missingness. However, Zhang and Wang (2013) showed that the studied frequentist methods for dealing with missing data worked only under certain conditions. Therefore, how to use Bayesian methods to deal with missing data, especially missing not at random data, for mediation and moderation analysis would be another interesting future research direction.

REFERENCES

Baron, R. M., & Kenny, D. A. (1986). The moderator–mediator variable distinction in social psychological research: Conceptual, strategic, and statistical considerations. *Journal of Personality and Social Psychology*, 51, 1173–1182.

Bayes, C. L., & Branco, M. D. (2007). Bayesian inference for the skewness parameter of the scalar skew-normal distribution. *Brazilian Journal of Probability and Statistics*, 21, 141–163.

Biesanz, J. C., Falk, C. F., & Savalei, V. (2010). Assessing mediational models: Testing and interval estimation for indirect effects. *Multivariate Behavior Research*, 45, 661–701.

Browne, W. J., & Draper, D. (2006). A comparison of Bayesian and likelihood-based methods for fitting multilevel models. *Bayesian Analysis*, 1, 473–514.

Carlin, B. P., & Louis, T. A. (2000). *Bayes and empirical Bayes methods for data analysis* (2nd ed.). Boca Raton, FL: Chapman & Hall/CRC.

Cohen, J., Cohen, P., West, S., & Aiken, L. S. (2003). *Applied multiple regression/correlation analysis for the behavioral sciences* (3rd ed.). London, UK: Erlbaum.

Cole, M. S., Walter, F., & Bruch, H. (2008). Affective mechanisms linking dysfunctional behavior to performrance in work teams: A moderated mediation study. *Journal of Applied Psychology*, 93, 945–958.

Congdon, P. (2001). *Bayesian statistical modeling*. New York, NY: Wiley.

Depaoli, S. (2013). Mixture class recovery in GMM under varying degree of class separation: Frequentist versus Bayesian estimaion. *Psychological Methods*., *18*(2), 186–219.

Eccles, J. S. (1998). *Achievement beliefs and the environment* (Tech. Rep. No. NICHD-PS-019736). Bethesda, MD: National Institute of Child Health and Development, National Institutes of Health.

Edwards, J. R., & Lambert, L. S. (2007). Methods for integrating moderation and mediation: A general analytical framework using moderated path analysis. *Psychological Methods*, 12, 1–22.

Gelman, A., Carlin, J. B., Stern, H. S., & Rubin, D. B. (2004). *Bayesian data analysis* (2nd ed.). Boca Raton, FL: Chapman & Hall/CRC.

Geman, S., & Geman, D. (1984). Stochastic relaxation, Gibbs distributions, and the Bayesian restoration of images. *IEEE Transactions on Pattern Analysis and Machine Intelligence*, 6, 721–741.

Geweke, J. (1992). Evaluating the accuracy of sampling-based approaches to the calculation of posterior moments. In J. O. B. J. M. Bernado, A. P. Dawid, & A. F. M. Smith (Eds.), *Bayesian statistics 4* (pp. 169–193). Oxford, UK: Clarendon.

Gilks, W. R., Richardson, S., & Spiegelhalter, D. J. (Eds.). (1996). *Markov chain Monte Carlo in practice*. London, UK: Chapman & Hall.

Hayes, A. F. (2013). *An introduction to mediation, moderation, and conditional process analysis: A regression-based approach*. New York, NY: Guilford.

Hayes, A. F. (2014). *An index and simple test of moderated mediation*. Manuscript submitted for publication.

Hayes, A. F., & Preacher, K. J. (2013). Conditional process modeling: Using structural equation modeling to examine contingent causal processes. In G. R. Hancock & R. O. Mueller (Eds.), *Structural equation modeling: A second course* (2nd, ed., pp. 219–266). Greenwich, CT: Information Age.

Ibrahim, J. G., & Chen, M.-H. (2000). Power prior distributions for regression models. *Statistical Science*, 15, 46–60.

Lambert, P. C., Sutton, A. J., Burton, P. R., Abrams, K. R., & Jones, D. R. (2005). How vague is vague? A simulation study of the impact of the use of vague prior distributions in MCMC using WinBUGS. *Statistics in Medicine*, 24, 2401–2428.

Lunn, D., Jackson, C., Thomas, A., Best, N., & Spiegelhalter, D. (2012). *The BUGS book: A practical introduction to Bayesian analysis*. Boca Raton, FL: Chapman & Hall/CRC.

Lunn, D., Thomas, A., Best, N., & Spiegelhalter, D. (2000). WinBUGS—A Bayesian modelling framework: Concepts, structure, and extensibility. *Statistics and Computing*, 10, 325–337.

MacKinnon, D. P. (2008). *Introduction to statistical mediation analysis*. Mahwah, NJ: Taylor & Francis Group.

MacKinnon, D. P., Lockwood, C. M., Hoffman, J. M., West, S. G., & Sheets, V. (2002). A comparison of methods to test mediation and other intervening variable effects. *Psychological Methods*, 7, 83–104.

MacKinnon, D. P., Lockwood, C. M., & Williams, J. (2004). Confidence limits for the indirect effect: Distribution of the product and resampling methods. *Multivariate Behavioral Research*, 39, 99–128.

Muller, D., Judd, C. M., & Yzerbyt, V. Y. (2005). When moderation is mediated and mediation is moderated. *Journal of Personality and Social Psychology*, 89, 852–863.

Muthén, B. (2010). *Bayesian analysis in Mplus: A brief introduction*. (Mplus Tech. Rep.). Retrieved from http://www.statmodel.com/

Muthén, L. K., & Muthén, B. O. (1998–2011). *M*plus *user's guide*. (6th) ed. Los Angeles, CA: Muthén & Muthén.

Natarajan, R., & McCulloch, C. E. (1998). Gibbs sampling with diffuse proper priors: A valid approach to data-driven inference. *Journal of Computational and Graphical Statistics*, 7, 267–277.

Plummer, M., Best, N., Cowles, K., & Vines, K. (2005, December 1). *Output analysis and diagnostics for MCMC*. Retrieved from http://www-fis.iarc.fr/coda/

Preacher, K. J. (2011). Multilevel SEM strategies for evaluating mediation in three-level data. *Multivariate Behavioral Research*, 46, 691–731.

Preacher, K. J., & Hayes, A. F. (2004). SPSS and SAS procedures for estimating indirect effects in simple mediation models. *Behavior Research Methods, Instruments, & Computers*, 36, 717–731.

Preacher, K. J., Rucker, D. D., & Hayes, A. F. (2007). Addressing moderated mediation hypotheses: Theory, methods, and prescriptions. *Multivariate Behavioral Research*, 42, 185–227.

Preacher, K. J., & Selig, J. P. (2012). Advantages of Monte Carlo confidence intervals for indirect effects. *Communication Methods and Measures*, 6, 77–98.

Preacher, K. J., Zhang, Z., & Zyphur, M. J. (2011). Alternative methods for assessing mediation in multilevel data: The advantage of multilevel sem. *Structural Equation Modeling*, 18, 161–182.

Preacher, K. J., Zypher, M. J., & Zhang, Z. (2010). A general multilevel SEM framework for assessing multilevel mediation. *Psychological Methods*, 15, 209–233.

Shrout, P. E., & Bolger, N. (2002). Mediation in experimental and nonexperimental studies: New procedures and recommendations. *Psychological Methods*, 7, 422–445.

Sobel, M. E. (1982). Asymptotic confidence intervals for indirect effects in structural equation models. In S. Leinhardt (Ed.), *Sociological methodology* (pp. 290–312). San Francisco, CA: Jossey-Bass.

Wang, L., & McArdle, J. J. (2008). A simulation study comparison of Bayesian estimation with conventional methods for estimating unknown change points. *Structural Equation Modeling*, 15, 52–74.

Wang, L., & Zhang, Z. (2011). Estimating and testing mediation effects with censored data. *Structural Equation Modeling*, 18, 18–34.

Wang, L., Zhang, Z., McArdle, J. J., & Salthouse, T. A. (2008). Investigating ceiling effects in longitudinal data analysis. *Multivariate Behavioral Research*, 43, 476–496.

Yuan, Y., & MacKinnon, D. P. (2009). Bayesian mediation analysis. *Psychological Methods*, 14, 301–322.

Zhang, Z., Hamagami, F., Wang, L., Grimm, K. J., & Nesselroade, J. R. (2007). Bayesian analysis of longitudinal data using growth curve models. *International Journal of Behavioral Development*, 31, 374–383.

Zhang, Z., McArdle, J. J., Wang, L., & Hamagami, F. (2008). A SAS interface for Bayesian analysis with WinBUGS. *Structural Equation Modeling*, 15, 705–728.

Zhang, Z., & Wang, L. (2013). Methods for mediation analysis with missing data. *Psychometrika*, 78, 154–184. doi:10.1007/S11336–012–9301–5